AERECO

BXC²

AIR EXHAUST GRILLE FOR MECHANICAL VENTILATION
WITH AUTOMATIC AIRFLOW CONTROL

SMART AIRFLOW MANAGEMENT TO SAVE ENERGY

Stiffer energy performance requirements for buildings are driving innovation in products and systems for this sector. This is especially true of ventilation systems, given that heat losses from air change account for an ever-growing share of a building's total consumption: the optimization of insulating materials and windows and the elimination of cold bridges, in particular, are increasing the impact of ventilation on energy consumption in the residential sector, which can reach as much as 50 % of a building's heating consumption.

Modulating airflows to save energy

Many tests and studies and extensive monitoring have shown that airflow modulation can make an effective contribution both to energy savings and to health and comfort. Automatically decreasing the airflow when a dwelling is empty, or nearly so, saves a large share of the energy used for heating: on average, between 25 and 60 % of the heat losses ascribable to ventilation.

Activation modes for all needs

The BXC² provides several activation modes in order to meet the varied specific needs of dwellings, offices, schools, and premises of other types. Moisture detection (humidity control), switch or remote control activation, presence detection, detection of CO_2 or even of VOCs: we have sought to respond as accurately as possible to the varied needs of occupants and to the pollutants present in the premises in which they live.

These sophisticated control modes optimize indoor air quality while saving energy, because it is by controlling airflow very accurately that best performance is achieved.

AN EXHAUST GRILLE FOR ALL SITUATIONS

The many detection versions available on the BXC (more than 10) meet the needs of premises ranging from the service rooms of residential buildings to more specialized facilities such as offices, locker rooms, classrooms, etc.

The table below presents these applications (non-restrictive list).

Note: BXC²s can be used in addition with BXC² co_2 or BXC² voc in the same room.

		BXC² h	BXC² p	BXC² hi	BXC² hp	BXC² pd	BXC² hpd	BXC² co_2	BXC² voc	BXC² rc	BFX
		Control settings									
		Humidity	Presence	Humidity + switch	Humidity + presence	Presence with timer	Humidity + presence with timer	Carbon dioxyde (CO_2)	Volatil Organic Compounds (VOC)	Remote Control	Fixed airflow, settable at installation
Housing	Kitchen	++		++++					++	+++	+
	Bathroom	++++		+++	+++		+++			+	
	WC		++++	++	+++	++++	+++	++	+++	+	
	Bathroom with WC	+	+	++	+++		++++		++		
	Laundry	++++		+++			+				++
Schools	Classrooms		+++		+	+	+	++++	++++		+
	Lavatories		++++	++	+++	++++	+++	++	+++	+	
Companies Administrations	Offices		+++		+	+	+	++++	++++		+
	Meeting rooms		+++		+	+	+	++++	++++	+	+
Fitness centre	Locker rooms	+++	++	++	+++		+++	++++	++++	+	+
	Shower rooms	++++		+++	+++		+++			+	++
Boats	Cabins (bathroom - WC)	++	++	+++	+++	++	+++	++++	+++	++	+
Mobile homes	Kitchen	++		++++				+++	+++	+++	+
	Bathroom and WC	+	+	++	+++	+	+++	+++	++++	++	+

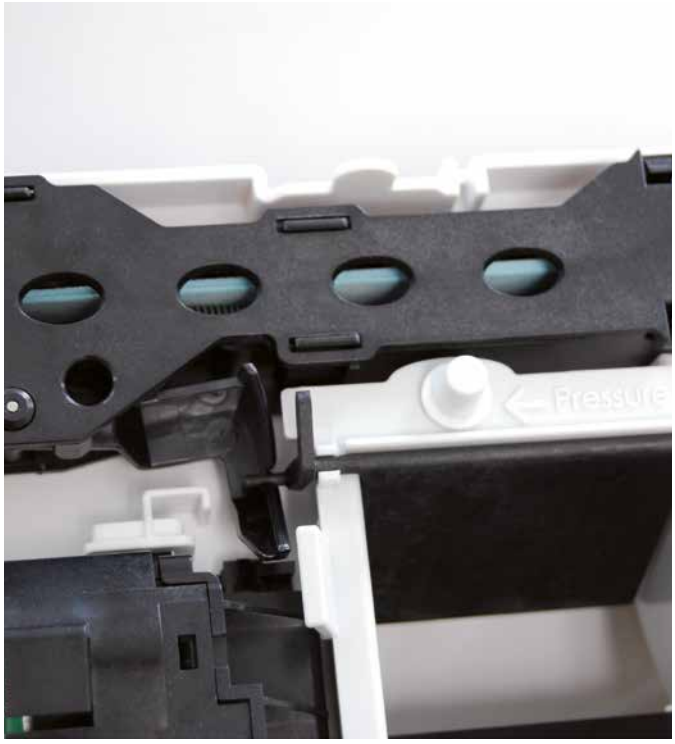

Precise and reliable mechanical humidity control

The humidity sensor incorporated in the BXC² comprises an array of strips of polyamide; their natural hygroscopic properties are used to control one of the two dampers in the airflow. Aereco has been using this type of mechanical sensor since 1983, when it patented the principle.

Inherently reliable because of its simplicity (it operates without electricity), the array expands or contracts according to the relative humidity to which it is exposed. This movement is transmitted to the damper, thereby determining the flow area of the exhaust grille. This very responsive sensor (it reacts in less than two minutes following a sudden change of humidity) not only detects humidity but also controls the dampers with no additional energy input, using the natural motive force of the fabric subjected to a variation of humidity. Located outside of the airflow, the sensor is not at risk of clogging and retains its properties: its operation is guaranteed for 30 years. Each product undergoes no fewer than seven inspections and tests to make sure of its performance. A further advantage is the device's operating mode: it is proportional to the level of humidity, unlike most electronic sensors (hygrostats) incorporated in the fans on the market, which control on/off switches rather than adapt to the ventilation needed.

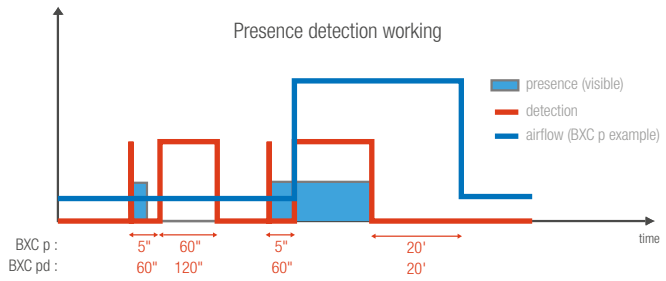

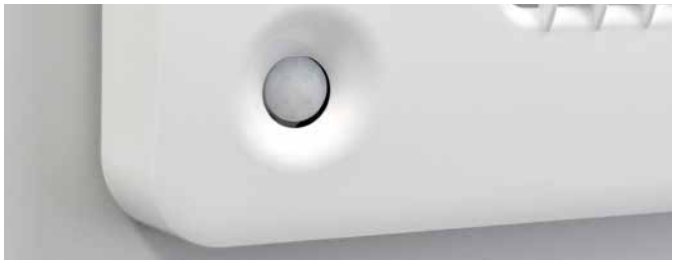

Smart presence detection for additional energy savings

The presence detection function in the 'p' and 'pd' versions of the BXC² comprises a very sensitive infrared detector that activates the peak airflow when it detects radiant movements within 2 meters, in a 100° sector. Ideal to optimize air quality in toilets, whether separate or located in a bathroom, these versions maximize energy savings: A timer closes the exhaust grilles 20 minutes after the last detection to limit useless heat losses. Its action is delayed slightly - 5 seconds after the first detection in the 'p' version, 60 seconds in the 'pd' version - to avoid opening the unit unnecessarily.

So when the door of the toilet is left open and someone walks past outside, the unit is not opened, but remains at the baseline airflow, and so does not waste heating energy. The version with the 60-second delay is best for toilets in bathrooms: merely washing your hands will not trigger the peak airflow.

AN EXHAUST GRILLE FOR ALL SITUATIONS

Built-in carbon dioxide or VOC detection, a world first

The BXC² inaugurates a new generation of advanced terminals for mechanical ventilation: for the first time in the world, an exhaust grille incorporates **CO_2 or VOC sensors.**

Both sensors employ the same principle: the opening threshold is selected from among 6 levels at the time of installation. It is set on a potentiometer that can be reached simply by removing the front panel of the product.

When the level of CO_2 or of VOC (depending on the version of the product) is below the opening threshold, the airflow is at the baseline rate (minimum). A green LED under the translucent lens on the front panel then indicates that the indoor air quality is satisfactory. When the level of the pollutant rises above this threshold, the exhaust grille opens to the peak airflow and the LED turns yellow; this state lasts as long as the level of pollution exceeds the preset threshold. The peak airflow rapidly decreases the concentration of the pollutant, and the exhaust grille returns to the baseline airflow when the level of the pollutant has remained below the threshold for more than 20 minutes. This ensures excellent indoor air quality while limiting heat losses, since the airflow remains low at all times when the levels of these pollutants are low.

The threshold can be reset at any time by removing the front panel of the exhaust grille and changing the setting of the potentiometer.

The version with CO_2 detection is especially well suited to premises where the level of human occupancy is highly variable and the usual activities do not generate humidity, such as classrooms, meeting rooms and offices, and even locker rooms.

The version with VOC detection is intended primarily for confined spaces where use has been made of materials having a high emissivity, such as treated wood, laminated panels, carpeting, and plastic-based surfacing materials, in particular. The cabins of boats and mobile homes are natural applications for this exhaust grille. This version is also well suited to the ventilation of locker rooms, to treat metabolic emissions due to sweating.

These exhaust grilles are powered from mains at 12 VAC or directly at 230 VAC with a specific accessory, and can control the opening of switch-controlled exhaust grilles (BXC² s or BXC² hi), in a “master-slave” system (one CO_2 or VOC unit can control up to 5 exhaust grilles).

Level	Setting off level of CO_2 or VOC (in ppm)
0	test position
1	600
2	800
3	1000
4	1200
5	1400
6	1600

Remote control

Another innovation: **a version with remote control, the BXC² rc.** The exhaust grilles can be actuated by a specific infrared remote control. When the exhaust grille receives the signal, it switches from the baseline airflow to the peak airflow, for 20 minutes after the last time it is actuated. The remote control eliminates the wiring of a switch. The BXC² rc can operate on batteries or use 12 VAC.

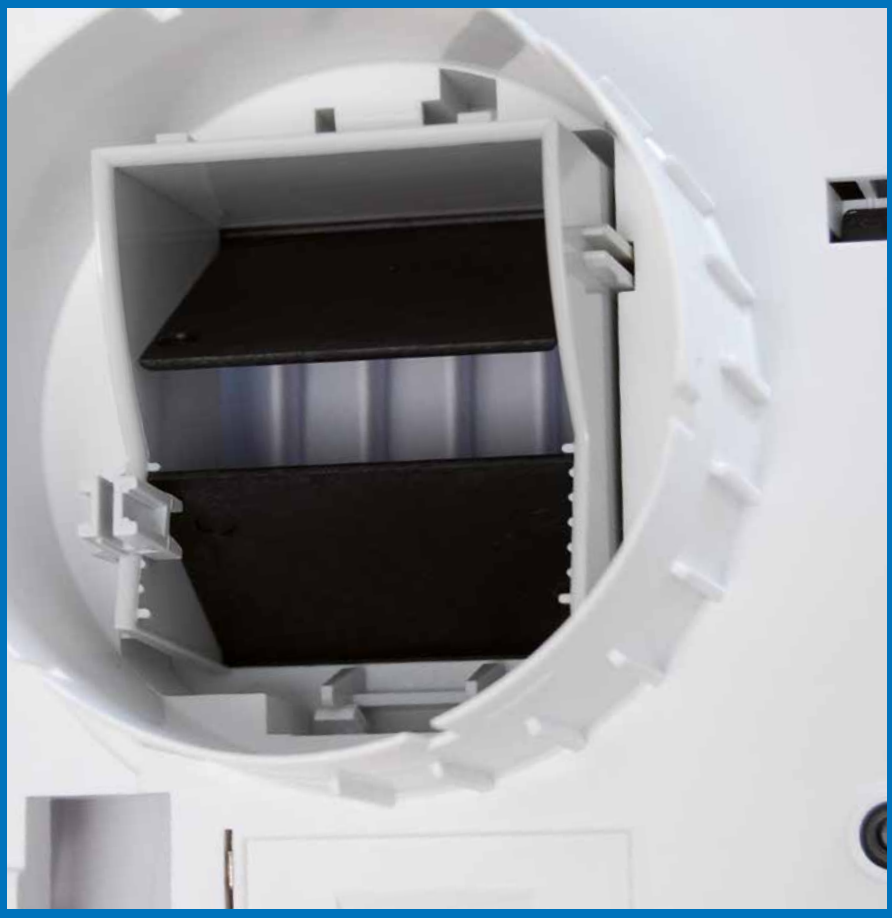

Adjustable damper

Airflow adjustable at the time of installation

The BXC² provides the possibility of adjusting the airflows according to needs or regulation requirements. One of the two dampers can be set to one of 6 positions, with a mean increment of 10 m³/h (maximum = +50 m³/h) at 100 Pa. This function can be used either to increase all of the airflows (minimum and maximum) or to compensate for inadequate pressure.

MORE COMFORT FOR THE OCCUPANT

A good ventilation system is unobtrusive: it is quiet and draught-free and blends in with its environment. The BXC² exhaust grille satisfies these criteria.

A perfectly quiet operation

Both the humidity-controlled version and the electrical versions of the BXC² are perfectly quiet in operation. The humidity sensor operates without a power supply and so generates no noise. The versions using electric power (presence detection, switch, remote control, slave, CO_2 or VOC) have quiet new-generation motors. It has even been necessary to add a buzzer, to indicate opening upon presence detection, so that the occupant will know that the device is still working properly.

Another important factor that occupants do not appreciate when it is poorly controlled: the noise of the air in contact with the grille and with the product, called 'proper noise'. Considerable research has been done on the aerodynamics of the product and the airflow to produce a very quiet device that will not annoy the occupant (less than 29 dB(A) at the maximum variable airflow).

Finally, special care has been taken to attenuate noise transmitted through the ductwork or from one room to another and to hold such transmission to a minimum. Acoustic accessories such as acoustic rings can be used in ducts Ø125 mm to further reduce noise transmission.

Blending in with the environment

With its modern design and bright finish, the BXC² blends in well in the service rooms of houses.

Most of the materials used in these rooms have bright finishes (ceramics, stainless steel, chrome), with white prevailing, helping the product fit in smoothly in particular in rooms such as bathrooms and WCs. The material used for the one-piece front panel is high-quality ABS, a guarantee of excellent colour-fastness and a durably attractive finish.


50 EURO
3
4

A MODEST INVESTMENT THAT QUICKLY PAYS FOR ITSELF

A definitely economical unit

With their very reasonable purchase cost, very simple installation, and almost no maintenance, BXC² exhaust grilles pay for themselves extremely quickly, whether compared to constant-flow mechanical ventilation systems (which are slightly less expensive but waste lots of heat) or to much more expensive systems such as balanced systems with heat recovery.

It is difficult to give a single number for the savings that result from using a ventilation system modulated according to needs, since these depend on the conditions of occupancy, the type of dwelling, the tightness of the enclosure, the weather, etc. However, in France, the CSTB has evaluated the savings of the Aereco modulated ventilation system at between 25 % and 60 % of the heat losses related to ventilation; this, given that the energy losses related to ventilation range from 15 % in very tight dwellings to 50 % in poorly insulated dwellings, situates the savings on the total heating consumption of a dwelling at between 4 % and 30 %.

For example, in a dwelling where the annual heating bill would be €500, the saving achieved by using the Aereco ventilation system rather than constant-flow ventilation can be evaluated between €20 and €150 every year.

Much less expensive than a balanced system

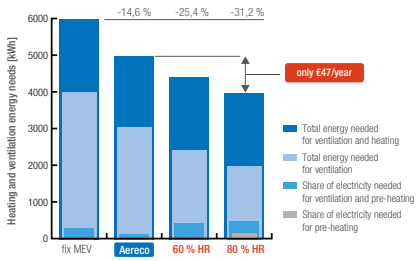

Graph – Total energy consumption of various ventilation systems
Assumptions: 1 kWh electricity = €0.19; 1 kWh Fuel oil or Gas = €0.07

When the Aereco modulated exhaust-only ventilation system is compared to a balanced system with heat recovery, it is found that the much higher purchase and installation cost of the latter (approximately 3 times the cost of the Aereco system), only partially offset by the small energy performance difference between the two systems (only 1 000 kWh – €47/year for a balanced system with 80 % heat recovery*), once again favours the Aereco system.

Moreover, the simplicity of the Aereco system including the BXC² means that no special maintenance is needed: no filter is necessary and there is no exchanger to clean. This holds the operating costs to a minimum.

*according to a study by the Fraunhofer Instituts Bauphysik IBP in Germany in 2008.

A ROBUST AND RELIABLE DESIGN

Its ABS front panel ensures that its colour and finish will last. The various sensors used (presence, CO_2, VOC, etc.) undergo many tests in the laboratory and in the plant to offer our customers optimal operation and reliability.

The BXC² is made entirely in France, near Paris, in an ISO 9001:2008 certified plant. No fewer than 7 inspections are performed on each product, in various stages of production. There are also quality checks of the finished products in our laboratory, where the airflow versus humidity characteristics, in particular, are tested.

With its humidity sensitive sensor guaranteed to operate for 30 years and the use of plastics of excellent quality, the BXC² is ready to face the stresses, dirt, and dust to which it will be exposed for its whole life.

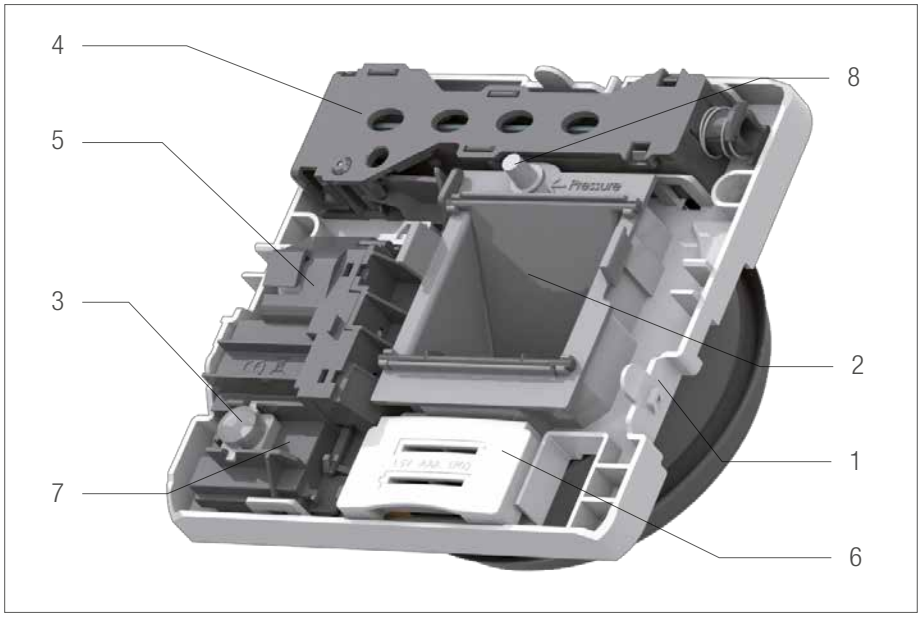

Presented version : BXC² with presence detection and humidity sensitive sensor

BXC² structure ('hp' version)	
1	Body
2	Shutters + case
3	Presence sensor
4	Humidity controlled sensor
5	Engine
6	Batteries
7	PCB
8	Pression plug

EXTREMELY SIMPLE INSTALLATION

The simplicity of installation of the BXC² makes it ideal for renovations, either on existing ventilation ducts (round or square) or as part of an all-new ventilation system.

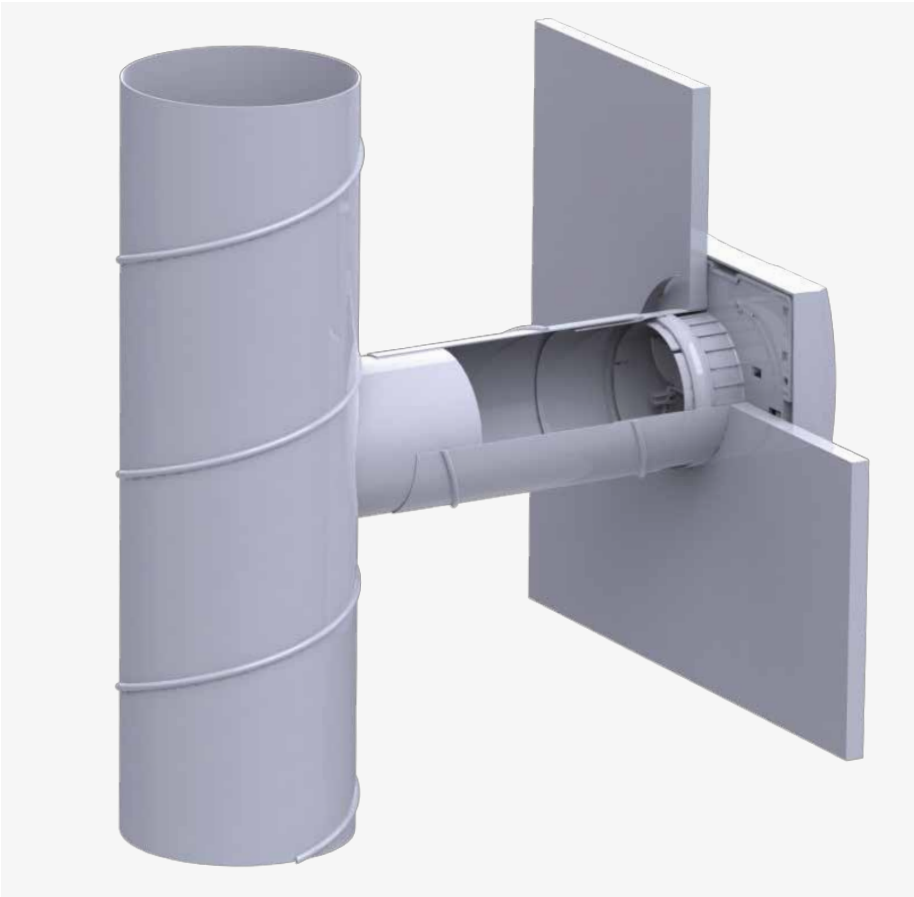

Available in spigot versions Ø100 mm and Ø125 mm and in a bracket version, it is simply attached to a wall or ceiling by 3 screws.

With an eccentric connection, the BXC² can easily be attached to a duct in a corner very near a wall or ceiling.

No electrical connection is necessary with the humidity-controlled version, or with the switch, remote control or presence detection versions when they are battery-powered.

The BXC² uses standard 1.5 V AAA (LR05) batteries having an average life of approximately two years; they can be replaced by accessories that lets the units run on on either 230 VAC or 12 VAC. When the batteries become too low, a buzzer indicates that they must be replaced. A test at the time of installation serves to check that the unit is powered and working properly.

Spigot version Ø100 mm

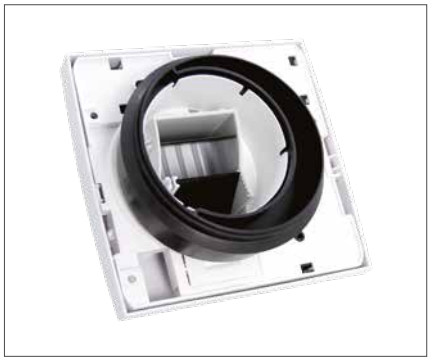

Spigot version Ø125 mm

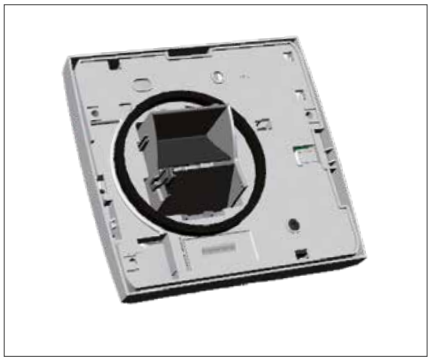

Bracket version

IDEAL FOR COMMISIONING AND MAINTENANCE

Pressure plug

A calibrated pressure plug to ease measurements

In its standard version, BXC² includes a pression plug to measure the pressure with a manometer, to deduce the airflow through a table (available in the installation instruction).

Once taken off, the plug stopper is used to fix the humidity sensitive airflow at its minimum position. This function is particularly appropriated for commissioning.

Simply cleaning the front panel and the damper box is enough

The units require almost no maintenance: simply dusting the front panel and cleaning the damper box with soapy water once a year keep it working properly. Because the sensors are located outside of the airflow, they are not at risk of clogging and require no special maintenance.

Limiting the number of fans to simplify maintenance

Using only one fan per dwelling or per building makes maintenance much simpler than with systems that use many motors (as when there is one fan per room, in particular).

This centralization of the fan (which can be placed on roof terrace in the case of multi-family dwellings) is of great benefit to the building manager, because it eliminates the need to enter the dwellings for maintenance.

A COMPLETE RANGE OF ACCESSORIES

Many accessories are available for the BXC²:

	Code	Description
	CAL261	supply device 12 VAC / 3 VDC (mandatory for BXC² connected to 12 VAC supply)
	CAL1228	supply device 230 VAC / 3 VDC (mandatory for BXC² directly connected to 230VAC supply)
	33007AL	trident plastic sleeve Ø125 mm - L 125 mm
	85343AL	trident plastic sleeve Ø125 mm - Ø80 mm - L 125 mm
	FBE475	aluminium filter box with washable filter for exhaust grilles
	19429AL	phoning ring for exhaust grilles - Ø125 mm
	AEA317	plastic adapter Ø125 mm, black, with joint
	AEA370	CAF - fire cold smokes damper

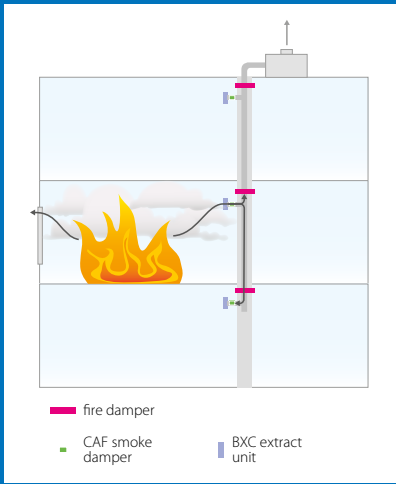

CAF - Smoke damper

The CAF is an accessory for the BXC² exhaust grille designed to protect dwellings from the smoke that might be propagated through the ventilation ducts in the event of a fire. When a fire breaks out, smoke may escape through the ducts to the lower stories (the upper stories are protected by fire dampers). The back-pressure then closes the CAF smoke dampers located in the dwellings on the lower stories, thereby preventing the propagation of the smoke. The CAF is specially designed for the BXC² exhaust grille: its pressure loss is negligible and its operation is perfectly quiet.

AN EXHAUST GRILLE THAT PROTECTS THE ENVIRONMENT

Large energy savings in use, like those delivered by the BXC², are not enough to justify a claim of a good carbon balance: Aereco strives to master all the other environmental impacts over the life of the product, from manufacture to recycling.

Local manufacture to optimize the carbon balance

Most of the components of the BXC² are made in France, in particular the injection-moulded plastic parts. This holds the environmental and energy costs of transport to a minimum, optimizing the carbon balance.

A product free of harmful substances

By means of appropriate specifications, Aereco makes sure that all of the electronic components used in the BXC², and in its other products, comply with the requirements of the European RoHS 2002/95/EC directive applicable since 1 July 2006. This means that lead, cadmium, mercury, hexavalent chromium, and specific bromine-based flame retardants, PBB and PBDE, are not used in our products.

A recyclable exhaust grille

In order to facilitate the end-of-life recycling and treatment of the product, the type of plastic used is marked on the main parts. ABS and PS, which account for more than 70 % of the weight of the product, are two materials that are especially easy to recycle.

A COMPONENT DESIGNED TO BE PART OF A COMPLETE SYSTEM

The BXC² can be used in both multi-family and single dwellings. In multi-family dwellings, the treatment can be collective (generally one or two fans in the roof) or else individual (one fan for each dwelling).

Collective treatment of multi-family dwellings

The air in the dwellings is changed by the fan, most often located in the roof (in an attic or on the roof). The air is extracted by exhaust grilles in the service rooms (kitchen, bathroom, WC), imposing an air change throughout the dwelling. The humidity-controlled air inlets then distribute the fresh air according to the needs of each main room. BXC² exhaust grilles in this way make it possible to distribute the available airflow generated by the fan according to the needs of the service rooms and dwellings. This means that rooms or dwellings with large fresh air needs receive larger flows than empty rooms or dwellings.

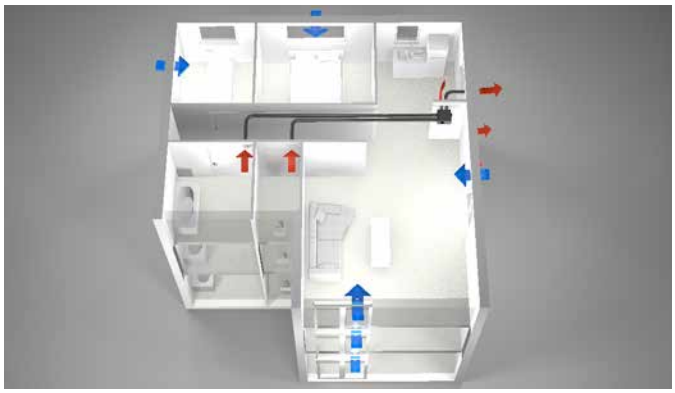

Individual treatment of dwellings

A fan is in this case installed in each dwelling. Locating the fan inside the dwelling has the advantage of making it directly accessible, facilitating maintenance. As in the case of the collective treatment of dwellings, air is extracted by humidity-controlled and/or presence detection exhaust grilles located in the service rooms (kitchen, bathroom, WC). The airflows are therefore distributed according to the needs of each of these rooms. The fresh air is distributed by humidity-controlled air inlets located in the main rooms.

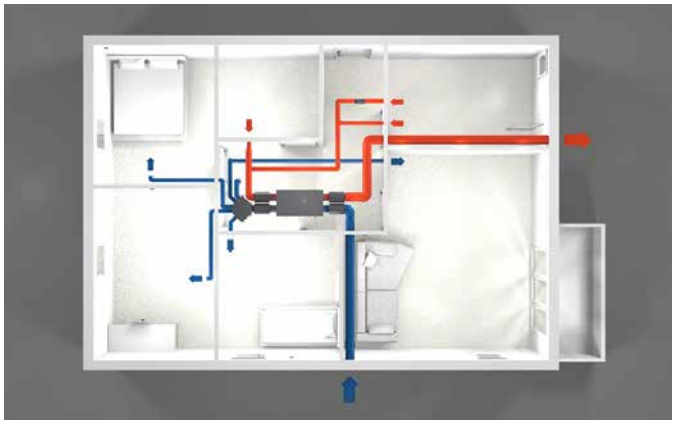

An exhaust grille that optimizes the performance of balanced systems with heat recovery

Modulation of the airflows at the terminals, which Aereco provides on its mechanical and natural ventilation systems, must not be regarded as opposed to the balanced technique. Quite the contrary, BXC² demand controlled exhaust grilles are not only compatible with the balanced principle, they in fact optimize its functioning, since they serve to distribute the extracted airflow according to the needs of the service rooms. This helps improve indoor air quality by delivering, for example, a larger airflow to a bathroom when someone is taking a shower (the humidity increases, and the airflow extracted follows), all fully automatically.

BXC² Exhaust unit for MEV

		BXC² h	BXC² p	BXC² hi	BXC² hp	BXC² pd
Standard code		BXC211	BXC213	BXC212	BXC272	BXC216
Airflow characteristics						
Humidity sensitive		■	-	■	■	-
Boost airflow		-	■	■	■	■
Boost airflow activated by switch		-	-	■	-	-
Boost airflow activated by presence detection		-	■	-	■	■
Other activation modes		-	-	-	-	-
Airflow @ 100 Pa (min.-max.) (1)	m³/h	12-80	12-80	12-80	12-80	12-80
Airflow '+' - maximum available airflow @ 100 Pa (2)	m³/h	130	130	130	130	130
Acoustics						
Sound pressure level Lp @ 2 m, 100 Pa, 80 m³/h, min. airflow '+' setting	dB(A)	28.3				
Dn,e,w (C, Ctr) Acoustic insulation, RH = 65 %, min. airflow '+' setting	dB	57 (-2 ; -4)	-	57 (-2 ; -4)	57 (-2 ; -4)	-
Power supply						
2 x 1.5 V AAA LR03 batteries (not supplied)		-	☒	☒	☒	☒
Buzzer (low battery charge)		-	■	■	■	■
12 VAC supply with specific transformer (ref. CAL261)		-	☒	☒	☒	☒
230 VAC supply with specific transformer (ref. CAL1228)		-	☒	☒	☒	☒
Characteristics						
Colour		white	white	white	white	white
Material (main)		PS / ABS	PS / ABS	PS / ABS	PS / ABS	PS / ABS
Installation						
Round duct compatibility with integrated spigot	mm	ø100	ø100	ø100	ø100	ø100
Round duct compatibility with accessory spigot (3)	mm	ø125	ø125	ø125	ø125	ø125
Round duct compatibility - bracket version (min.-max.)	mm	ø85 - ø90	ø85 - ø90	ø85 - ø90	ø85 - ø90	ø85 - ø90
Rectangular duct compatibility - bracket version (min.-max.)	mm	67 x 60 - 67 x 66	67 x 60 - 67 x 66	67 x 60 - 67 x 66	67 x 60 - 67 x 66	67 x 60 - 67 x 66
Other functions						
60" delay to activate the presence boost airflow		-	-	-	-	■
Pressure plug		■	■	■	■	■

Airflow characteristics

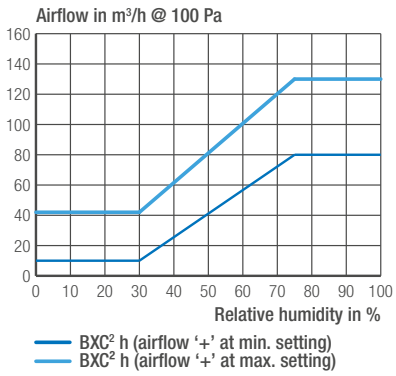

Dimensions in mm

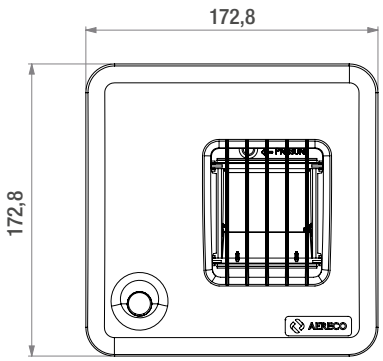

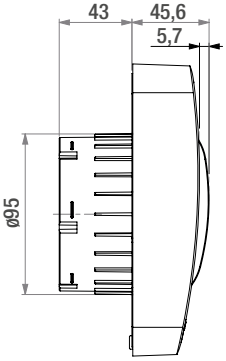

BXC² hpd	BXC² co_2	BXC² voc	BXC² hrc	BXC² rc	BFX	BXC² s
BXC214	BXC401	BXC402	BXC406	BXC404	BFX369	BXC403
■	-	-	■	-	-	-
■	■	■	■	■	-	■
-	-	-	-	-	-	⊠
■	-	-	-	-	-	-
-	CO_2 level	VOC level	remote control	remote control	-	BXC² CO_2 or VOC
12-80	12-80	12-80	12-80	12-80	12 / 130 (4)	12-80
130	130	130	130	130	130	130
			28.3			
57 (-2 ; -4)	-	-	57 (-2 ; -4)	-	-	-
⊠	-	-	⊠	⊠	-	⊠
■	-	-	■	■	-	⊠
⊠	■ (CAL included)	■ (CAL included)	⊠	⊠	-	■
⊠	-	-	⊠	⊠	-	⊠
white	white	white	white	white	white	white
PS / ABS	PS / ABS	PS / ABS	PS / ABS	PS / ABS	PS / ABS	PS / ABS
ø100	ø100	ø100	ø100	ø100	ø100	ø100
ø125	ø125	ø125	ø125	ø125	ø125	ø125
ø85 - ø90	ø85 - ø90	ø85 - ø90	ø85 - ø90	ø85 - ø90	ø85 - ø90	ø85 - ø90
67 x 60 - 67 x 66	67 x 60 - 67 x 66	67 x 60 - 67 x 66	67 x 60 - 67 x 66	67 x 60 - 67 x 66	67 x 60 - 67 x 66	67 x 60 - 67 x 66
■	-	-	-	-	-	-
■	■	■	■	■	■	■

Note: airflows given for a ø100 mm duct

■ standard / included - ⊠ compatible

(1) Default setting.
(2) Airflow '+' : the airflow can be increased from +10 m³/h to + 50 m³/h (6 available positions). This function can be used to adapt to lower pressures or to specific regulations imposing higher airflows. Standard is position 0 (minimum airflow = 12 m³/h @ 100 Pa).
(3) Delivered in specific versions or available as accessory (ref. AEA317).
(4) Total of 18 configurations available for airflow setting for BFX version.

Aereco S.A.
62 rue de Lamirault – Collégien – 77615 MARNE LA VALLEE CEDEX 3 – FRANCE – tel. +33 1 60 06 26 63 – fax +33 1 64 80 47 26
www.aereco.com